Operating Instructions

G40269 Giant II Hand Tool

1. Band may be used from bulk roll as this *completely eliminates waste of band*. Slide buckle on band as shown, bringing end of band around object to be clamped and again through buckle.

2. Continue band around object once more and again through buckle. *Double banding develops a great deal more radial compression than single banding.* Bend end of band under buckle.

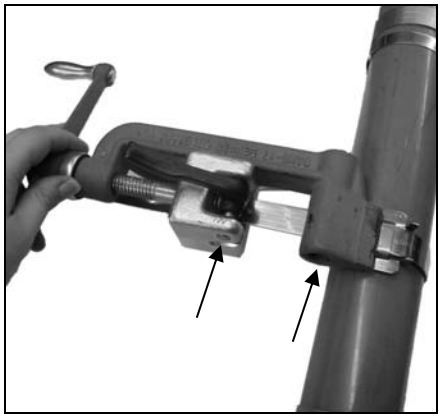

3. Place band in open of tool nose and gripper block. Move into slot as far as possible, to avoid buckle sliding into tool nose. Apply tension by turning handle of tool.

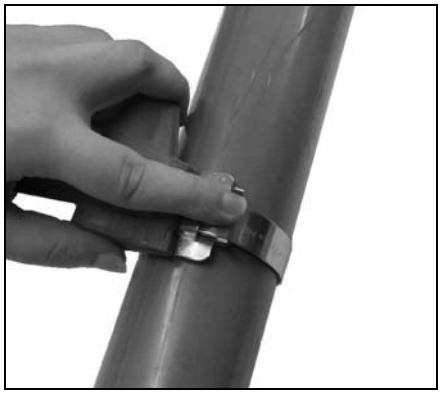

4. Place finger on BAND-IT Band at buckle bridge while tensioning with tool handle. When you feel BAND-IT Band stop moving through buckle as you are turning handle, *maximum pressure is being exerted by the BAND-IT Band* around object being clamped. *Stop turning handle.*

5. *Roll tool over buckle, backing off with tension handle1- 1½ turns throughout entire rolling operation*. Failure to back off tension with tension handle throughout entire course of roll-over may result in breaking of band. There is no loss of tension as band released is used up in the bend.

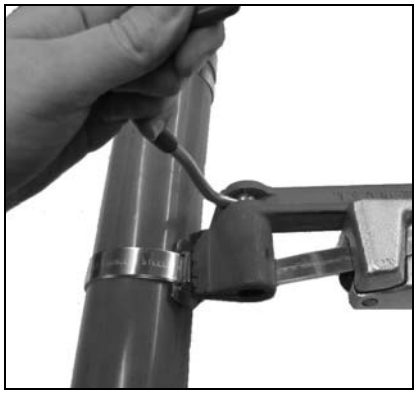

6. Pull cutting handle to cut the band. When applying Giant Band clamps, prior to cutting off clamp, release band gripper and push tool nose away from buckle approx. ¼".

7. Remove tool, holding stub of band down with thumb.

8. Hammer down buckle ears to complete BAND-IT clamp.

BAND-IT-IDEX, Inc.
A Unit of IDEX Corporation
4799 Dahlia Street
Denver, CO 80216-3070 USA
P: 1-800-525-0758
F: 1-800-624-3925

www.BAND-IT-IDEX.com

Document # P36187 Rev. H

Gripper Cleaning Instructions:

1. Remove gripper. Align gripper pin hole with notch in tool frame. Using a punch and hammer, punch pin out of slide block.

2. Using a wire brush, clean all foreign matter from teeth.

3. Replace pin: Align gripper hole with slide block hole, insert pin in hole and hammer pin in place.

NOTE: Periodically apply food-grade white lubricant or equivalent to tension screw thread (on page 3) to prevent excessive wear.

If tool fails to securely grip tail of clamp, follow gripper cleaning instructions above.

Refer to website for warranty information: http://www.band-it-idex.com/warranty.html

BAND-IT-IDEX, Inc.
A Unit of IDEX Corporation
4799 Dahlia Street
Denver, CO 80216-3070 USA
P: 1-800-525-0758
F: 1-800-624-3925

Document # P36187 Rev. H

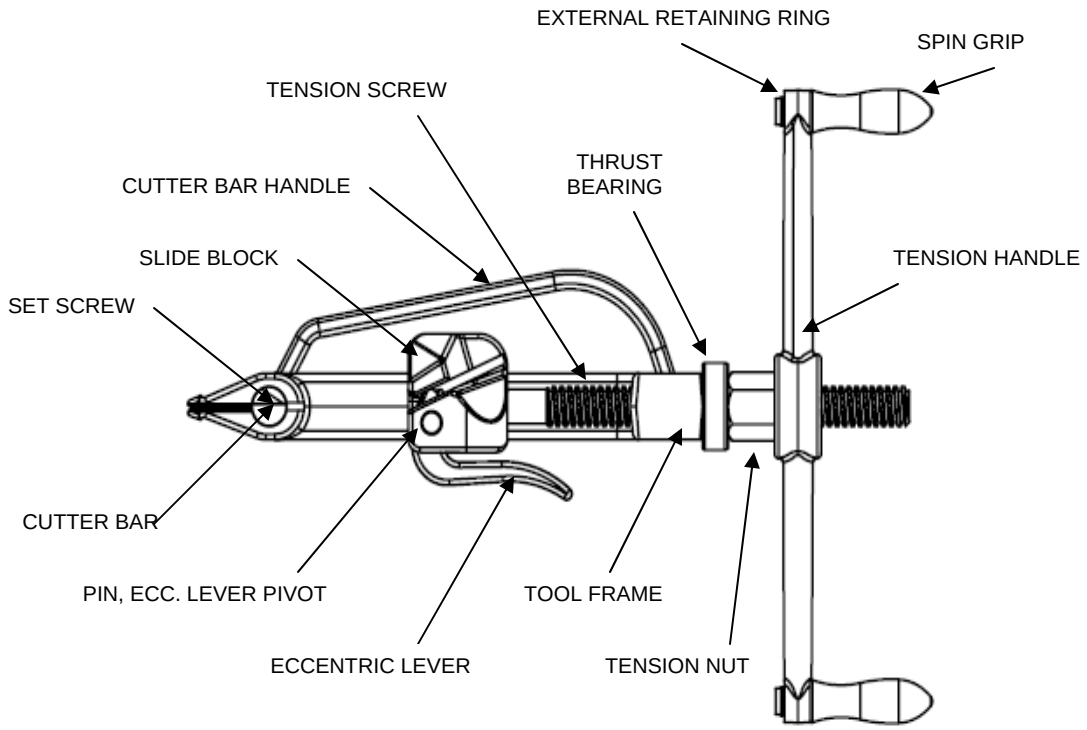

1. To assist in removing threaded parts, apply heat to soften locking compound.

2. When connecting the tension screw to the slide block, clean threads (male and female) of foreign matter, then apply two drops of high strength locking compound (Loctite 271 or equiv.) onto male threads and connect parts together. Apply 3 oz. of white lubricant or equiv. to tension screw thread.

3. When connecting the set screw to the cutter bar, clean threads (male and female) of foreign matter, then apply one drop of medium strength locking compound (Loctite 242 or equiv.) onto male thread and connect parts together.

REPAIR PARTS LIST FOR G40269	
PART #	DESCRIPTION
G41387	TOOL FRAME
G40888	THRUST BEARING
G42487	SLIDE BLOCK ASSEMBLY INCLUDES: SLIDE BLOCK, TENSION SCREW, TENSION NUT, ECCENTRIC LEVER, AND LEVER PIVOT PIN
G42087	TENSION HANDLE ASSEMBLY INCLUDES: TENSION HANDLE, SPIN GRIP AND EXTERNAL RETAINING RING
G42287	CUTTER BAR ASSEMBLY INCLUDES: CUTTER BAR HANDLE, CUTTER BAR, AND SET SCREW (ON FAR SIDE)

BAND-IT-IDEX, Inc.
A Unit of IDEX Corporation
4799 Dahlia Street
Denver, CO 80216-3070 USA
P: 1-800-525-0758
F: 1-800-624-3925

Document # P36187 Rev. H

Forming a band clamp and operating the C001 Tool

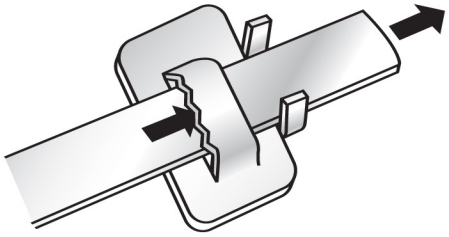

1. Pull appropriate length of band from BAND-IT Tote (approx. 3 1/2 times the diameter of the pole or mastarm for a single-wrapped clamp and seven times the diameter for a double-wrapped clamp. Add 6-8 inches for both single-wrapped and double-wrapped clamps to accommodate the tail and bracket design.) Cut the band using one of the BAND-IT tools with built-in cutter. One end of the band will be very flat and the opposite end will be slightly bent from the cut-off.

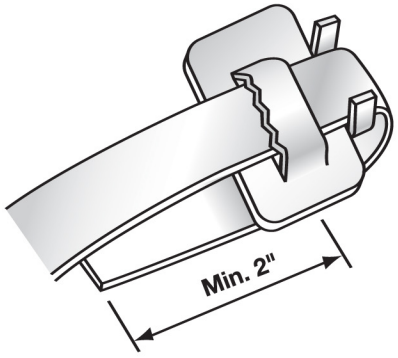

2. Holding the buckle in one hand, with ears pointing upward and to the right as shown, insert the bent or twisted end of the band through the buckle "bridge," past the ears and bend so that at least 2 inches are underneath the buckle.

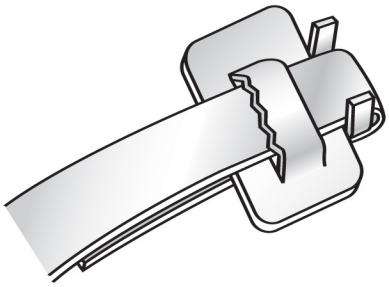

3. Squeeze this "lip wrap" to flatten the bend preventing "pull-out" during tensioning.

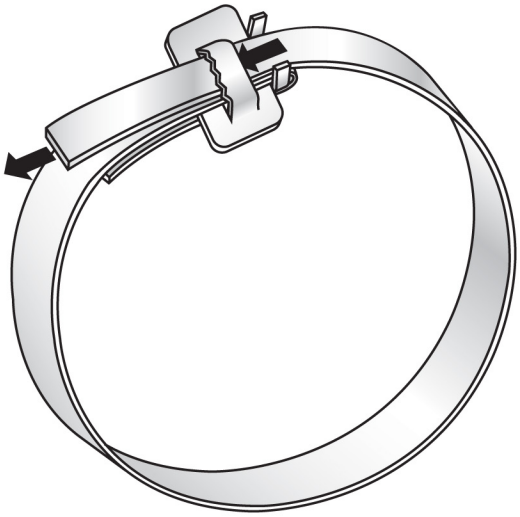

4. Wrap band through sign bracket and around the pole or mastarm and thread through bridge as shown.

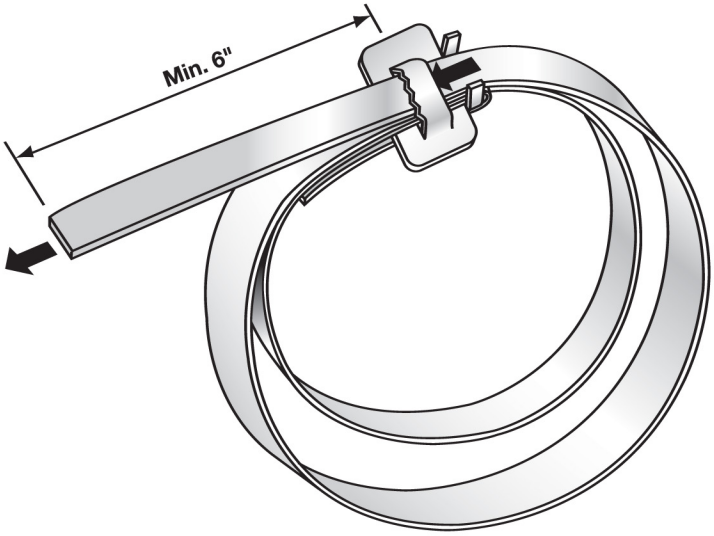

5. Repeat a second wrap of band through the bracket and buckle for a continuous double-wrap application. Double-wrapping develops greater radial compression than single-wrapped clamps and more than doubles the holding strength for heavy objects and high wind loads.

Forming a band clamp and operating the Cool Tool

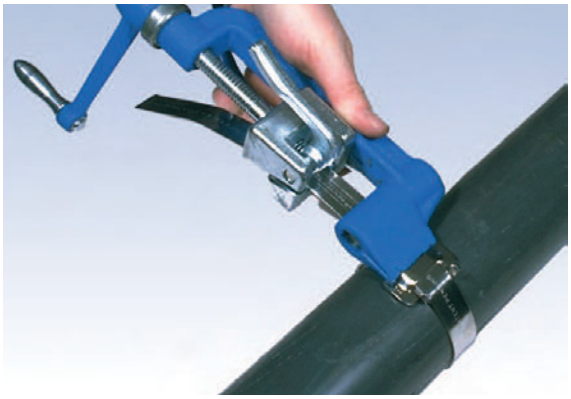

6. Place band in open slot of tool nose and gripper block. Move into slot as far as possible to prevent buckle from sliding into tool nose. With thumb on band gripper lever, apply tension by turning handle of tool. After tension is created, it is no longer necessary to hold the band gripper lever as it locks itself under tension. When band stops moving through buckle, maximum tension has been applied. Stop turning handle.

7. To set the lock and cut off band, roll tool nose over buckle, relieving a slight amount of tension by backing off tension handle during this fold over operation. Failure to back off tension handle throughout the entire course of roll over may result in breaking band. On the other hand, releasing too much tension may result in a loose clamp.

8. Pull cutting handle to cut the band.

9. Remove tool, holding stub of band down with thumb.

10. Hold clamp tail down between ears while hammering the buckle ears down to hold band stub in place. This completes the secure BAND-IT clamp.

Fluted Pole Applications

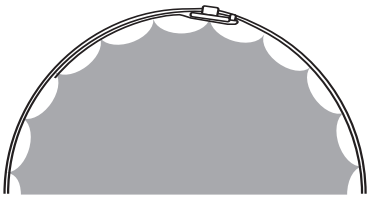

Top View

When tensioning a conventional clamp over a fluted pole, it is necessary to extend the length of the “lip wrap” several inches to assure contact with 2 or 3 flute ridges. Also, buckle placement over a ridge is important to provide support for the lock and prevent the “lip wrap” from shifting.

BAND-IT®
THE CLAMPING EXPERTS

IDEX CORPORATION

Product & Application FAQ

C00169 applying a band clamp

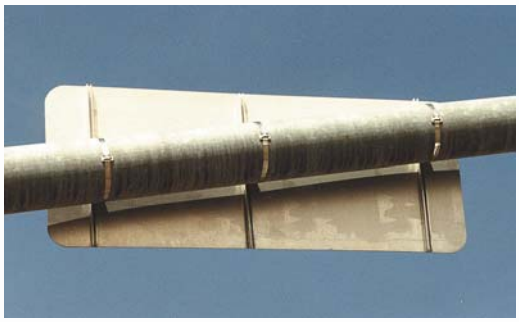

Band and Buckle applied to a Mast Arm. One of many application solutions BAND-IT offers.

The World's Leader in Quality Engineered Band Clamping Systems.

BAND-IT-IDEX, Inc.
A Unit of IDEX Corporation

PO Box 16307
Denver, CO 80216

Phone: (303) 320-4555
Fax: (303) 333-6549
E-mail: marketing.BAND-IT@idexcorp.com

Question: When is my band clamp tight?

Answer:

This FAQ provides a method to indicate when a band clamp has reached its maximum holding force. The point of maximum holding force may be too tight for some objects and not tight enough for others. Neither this FAQ nor BAND-IT can provide a method to tell if a clamp has been applied too tight or too loose. BAND-IT always recommends testing as the only measure to determine if tightness is appropriate for the application.

When steel band is tensioned up to its "yield strength" it has maximum holding force. Additional tensioning beyond the yield strength will stretch the band but not apply additional holding force. If tensioning and stretching continues the band will, ultimately, break. ***The key is to get consistently close to the band's "yield strength" without significantly stretching the band.***

Hints and Help:

How to determine if a band has reached its "yield strength":

1.Insert the clamp tail into the tensioning tool. Tension until the clamp is snug.
2.Using a felt tip marker, place 3 or 4 lines across the band clamp, about ¼" in front of the buckle.
3.Resume tensioning and watch for movement of the lines in relation to the buckle.

The clamp has reached its yield strength when the lines stop moving. **STOP!** Further tensioning of the clamp may result in band failure.

For More Information or Instruction Manuals, Please Visit www.BAND-IT-IDEX.com

BAND-IT®
THE CLAMPING EXPERTS

IDEX CORPORATION

Product & Application FAQ

1. Remove gripper. Align gripper hole with notch in tool frame. Using a punch and hammer, punch pin out of slide block.

2. Using a wire brush, clean all foreign matter from teeth.

3. Replace pin. Gripper spring must be seated in tension screw hole. Align gripper hole with slide block hole, insert pin in hole and hammer pin in place.

The World's Leader in Quality Engineered Band Clamping Systems.

BAND-IT-IDEX, Inc.
A Unit of IDEX Corporation
PO Box 16307
Denver, CO 80216

Phone: (303) 320-4555
Fax: (303) 333-6549
E-mail: marketing.BAND-IT@idexcorp.com

Question: What causes tool slip when tightening clamps?

Answer:

Most BAND-IT tensioning tools use a similar gripper design to securely grip the band. The gripper is precisely machined, hardened, and designed so that as tension increases, more force is applied to the band.

During tensioning, the cam-like motion of the gripper results in the gripper teeth digging into the band. This causes metal particles, dirt, oils and other debris to become trapped in the spaces between the gripper teeth. Over time and with multiple uses the debris can completely fill the spaces and become compacted resulting in the smoothing of the gripper surface. The smooth surface is no longer able to grip the band and slipping results. Slipping may also cause the gripper teeth to chip. Chipping results in more slip and eventually will damage the entire gripper.

Hints and Help:

Eliminating this problem requires a fast and easy routine maintenance procedure which is described in the instructions included with every tool and posted on our website, www.band-it-idex.com/products_tools.asp.

In brief, the maintenance process is:

1.Place the tool on a hard surface.
2.Align the slide block and tool frame.
3.Remove the gripper pin by pushing it through the slide block.
4.Wire brush the gripper face by hand or using light pressure on a power tool.
5.Reassemble the parts in reverse order being sure to compress the gripper spring if present.

Regularly cleaning the gripper and maintaining proper lubrication will assure long service life.

For More Information or Instruction Manuals, Please Visit
www.BAND-IT-IDEX.com

FAQ– 108
Issued 02/06